PHONES
0 (800) 800 130
(050) 462 0 130
(063) 462 0 130
(067) 462 0 130

130 COM.UA

Internet store of autogoods

SKYPE
km-130

CAR RECEIVERS — Receivers • Media receivers and stations • Native receivers • CD/DVD changers • FM-modulators/USB adapters • Flash memory • Facia plates and adapters • Antennas • Accessories | CAR AUDIO — Car audio speakers • Amplifiers • Subwoofers • Processors • Crossovers • Headphones • Accessories | TRIP COMPUTERS — Universal computers • Model computers • Accessories | GPS NAVIGATORS — Portable GPS • Built-in GPS • GPS modules • GPS trackers • Antennas for GPS navigators • Accessories | VIDEO — DVR • TV sets and monitors • Car TV tuners • Cameras • Videomodules • Transcoders • Car TV antennas • Accessories | SECURITY SYSTEMS — Car alarms • Bike alarms • Mechanical blockers • Immobilizers • Sensors • Accessories | OPTIC AND LIGHT — Xenon • Bixenon • Lamps • LED • Stroboscopes • Optic and Headlights • Washers • Light, rain sensors • Accessories | PARKTRONICS AND MIRRORS — Rear parktronics • Front parktronics • Combined parktronics • Rear-view mirrors • Accessories | HEATING AND COOLING — Seat heaters • Mirrors heaters • Screen-wipers heaters • Engine heaters • Auto-refrigerators • Air conditioning units • Accessories | TUNING — Vibro-isolation • Noise-isolation • Tint films • Accessories | ACCESSORIES — Radar-detectors • Handsfree, Bluetooth • Windowlifters • Compressors • Beeps, loudspeakers • Measuring instruments • Cleaners • Carsits • Miscellaneous | MOUNTING — Installation kits • Upholstery • Grilles • Tubes • Cable and wire • Tools • Miscellaneous | POWER — Batteries • Converters • Start-charging equipment • Capacitors • Accessories | MARINE AUDIO AND ELECTRONICS — Marine receivers • Marine audio speakers • Marine subwoofers • Marine amplifiers • Accessories | CAR CARE PRODUCTS — Additives • Washer fluid • Care accessories • Car polish • Flavors • Adhesives and sealants | LIQUID AND OIL — Motor oil • Transmission oil • Brake fluid • Antifreeze • Technical lubricant

In store "130" you can find and buy almost all necessary goods for your auto in Kyiv and other cities, delivery by ground and postal services. Our experienced consultants will provide you with exhaustive information and help you to chose the very particular thing. We are waiting for you at the address

https://130.com.ua

Nakamichi®

NQ721BE

User Manual

13...ua

Digital Media RECEIVER

nakamichicaraudio.com Nakamichi.Global nakamichi.caraudio

Autogoods “130”

DEAR CUSTOMER

Dear Customer,

Congratulations on purchasing our Nakamichi mobile system product for your sound system.
This product has been designed and manufactured to Nakamichi's exacting standards to ensure many years of audio enjoyment. For the best performance, we recommend that you have your Nakamichi product installed by an authorized Nakamichi dealer.
If you would like to install this product on your own, we recommend for you to go through this manual to familiarize yourself with all the installation requirements and procedures.
If you encounter any issues or if you have any questions on the operation of this product, please contact your nearest authorized Nakamichi dealer for assistance, or you may also contact us through our website or social media channels.

Installation of your Product

In today's modern vehicles, it is very easy to cause damage to existing systems through improper installation. Please follow and scrutinize all wiring diagrams to ensure that you have connected everything in its proper place.
If you find yourself uncomfortable of unfamiliar with understanding the wiring and installation diagrams or testing instructions, do contact your nearest Nakamichi dealer to perform the installation for you.

Safety Warnings and Considerations (for Amplifier / DSP / Active Woofer)

- Clean only with a dry cloth or other similar materials.
- Install your product in a dry, well-ventilated location that does not interfere with your vehicle's safety equipment.
- Do not block any ventilation openings when installing this product.
- Do not mount the product in the engine compartment of your vehicle or in any areas of extreme heat such as mufflers, silencers, exhaust pipes or other heat producing apparatus.
- Securely mount the product so that it does not come loose in the event of a collision or as a result of repeated vibrations that might occur during normal operation.
- Installation of the apparatus must be done with great care to prevent damage to your vehicle's fuel lines, power, and other electrical wiring, hydraulic brake lines, and other systems. If possible always visit your nearest Nakamichi dealer to perform the installation.

130.com.ua

DEAR CUSTOMER

- Do not run any wiring outside or underneath the vehicle. Keep all wires inside the vehicle.
- Take the necessary precautions when making connections to the vehicle's battery to avoid any potential shock.
- Protect all system wires from sharp edges by carefully routing them, always use rubber grommets to protect wiring and cables whenever you are installing them through metal openings.
- Secure all wiring using cable ties or wire clamps to protect them from moving parts and sharp edges.
- This apparatus shall not be exposed to dripping or splashing, and no object filled with liquids, shall be placed on the apparatus.
- Refer all servicing to qualified service personnel. Servicing is required when the apparatus has been damaged in any way, such as the power input terminals are damaged, liquid has been spilled or objects have fallen into the apparatus, the apparatus has been exposed to rain or moisture, does not operate normally, or has been dropped.
- Fuses shall be replaced only with the correct type and fuse value, + and only when the apparatus is powered off.
- Exposure to high sound pressure levels may lead to permanent hearing loss. Take every precaution to protect your hearing.
- This product is designed specifically for use with 12 volt, negative-ground electrical systems only. Using this product in systems with positive ground and/or voltages other than 12V may result in damage to the product and your system.

Warranty Considerations

Nakamichi warrants this product to be free of defects in materials and workmanship for a **period stated by your country's authorized Nakamichi distributor.** This warranty is not transferable and applies only to the original owner who has purchased from an authorized Nakamichi dealer.
Should service be necessary under this warranty for any reason due to manufacturing defect or malfunction, Nakamichi will (at its discretion), repair or replace the defective product with new or remanufactured product at no charge. Damage caused by the following is not covered under warranty: accident, misuse, abuse, product modification or neglect, failure to follow installation instructions, unauthorized repair attempts, misrepresentations by the seller.
This warranty does not cover incidental or consequential damages and does not cover the cost of removing or reinstalling the unit(s). Cosmetic damage due to accident or normal wear and tear is not covered under warranty.
Warranty is void if the product's serial number has been removed or defaced.

130.com.ua

CONTENTS

ACCESSORY LIST....1 EN
DIMENSIONS....1 EN
OVERVIEW OF THE COMPONENTS....2 EN
- Remove Panel
- Remote Control

WIRING DIAGRAM....3 EN
GENERAL OPERATION....4 EN
- Power On/Off
- Removing the Front Panel
- Volume Up and down
- Mute on/off
- Changing the Modes
- Setting the Audio/Menu
- Display
- Auxiliary Input Jack
- Reset

RADIO OPERATION....7 EN
- Switch Between Europe/USA/Asian/Russian Frequency
- Change Bands
- To Store / Recall Preset Stations
- Manual Tuning
- Seek Tuning
- Automatic Store Preset Station

USB OPERATION....8 EN
- To Insert USB
- Select Next Track or Previous Track
- Faste Forward/Backward
- Play/Pause
- Introduction Scan
- Repeating the track
- Playing All Tracks in Random
- Folder/Track Navigation

BLUETOOTH OPERATION....9-10 EN
- Pair and Connect
- Make a Call
- Redial Last Dialed Number
- Answer a Call
- Reject a Call or End a Call
- Switch Audio Between Car audio and Mobile Phone
- Adjust Talk Volume
- Audio Streaming (A2DP)

APP OPERATION....10 EN
SPECIFICATIONS....11 EN

Autogoods.com.ua

INTRODUCTION

ACCESSORY LIST

1. User Manual	1pc
2. Bluetooth/USB Receiver	1pc
3. ISO Male Connector	2pcs
4. Disassemble Tool	2pcs
5. Remote Control	1pc

DIMENSIONS(Unit: mm)

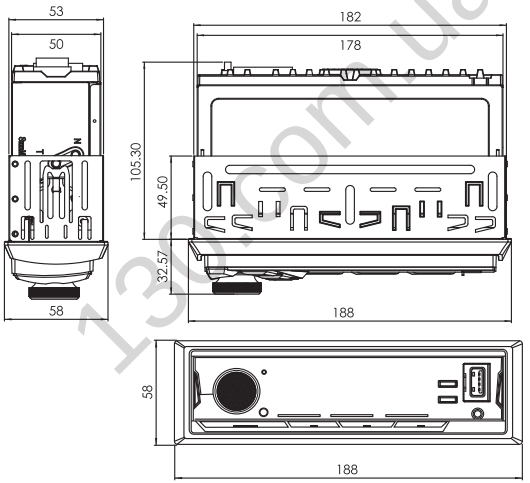

130.com.ua

CONTENTS

OVERVIEW OF THE COMPONENTS

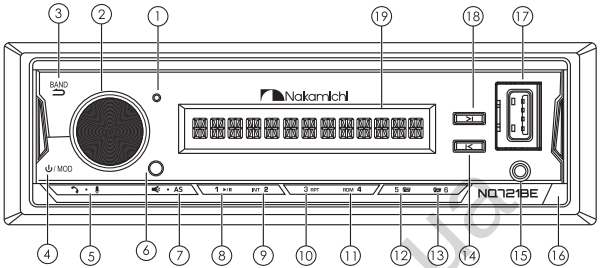

REMOVE PANEL

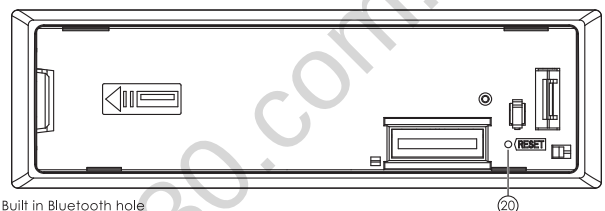

1. Built in Bluetooth hole
2. Volume knob, SEL button (short press to enter audio / menu setting mode)
3. Return button / FM1, FM2, FM3, AM1, AM2 conversion
4. Power switch, mode selection button
5. Answer call, End call (long press)
6. Infrared remote control receiver
7. Mute button, As button (auto store preset radio station)
8. Preset station 1, music playing / pause playing
9. Preset radio station 2, preview 10 seconds before the song
10. Preset station 3, repeat mode selection
11. Preset radio station 4, play songs randomly
12. Preset radio station (5), previous folder, 10 songs (long press)
13. Preset radio station (6), next folder, next 10 songs (long press)
14. Decrease tuning station frequency / select previous song, fast backward key
15. Aux external audio input interface
16. Panel release button (for panel removal)
17. USB flash interface
18. Increment tune radio frequency / select next song, fast forward key
19. LCD screen
20. reset button

REMOTE CONTROL

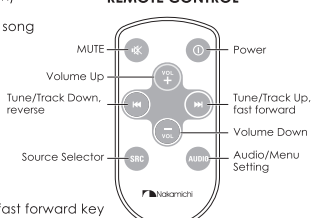

Autogoods “130”

WIRING DIAGRAM

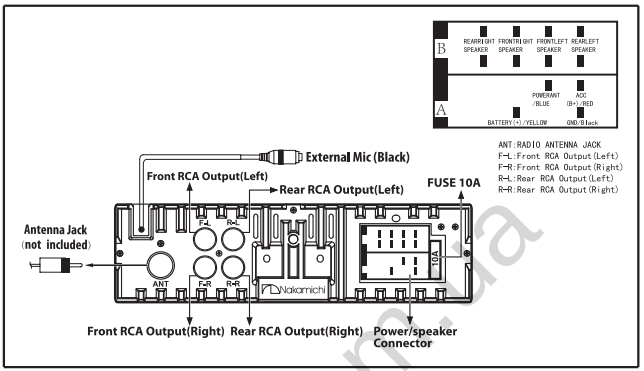

	Color	Function
A	Red	Lignition Cable
	Black	Ground Cable
	Blue	ANT Automatic
	Yellow	Power Supply
B	Green Green/Black	Rear Left Speaker(+) Rear Left Speaker(-)
	White White/Black	Front Left Speaker(+) Front Left Speaker(-)
	Grey Grey/Black	Front Right Speaker(+) Front Right Speaker(-)
	Violet Purple/Black	Rear Right Speaker(+) Rear Right Speaker(-)

130.com.ua

GENERAL OPERATION

Power On/Off
• Press any button to turn the unit on.
• Press and hold the ⏻/**MODE** button to turn the unit off.

Removing The Front Panel
Press the **RELEASE** button to detach the front panel.

Volume Up and down
Rotate the **Volume** knob to adjust the volume level.

Mute On/Off
Briefly press the 🔇 button to toggle mute on or off.

Changing The Modes
Press the ⏻/**MODE** to select between Radio, USB(with USB device inserted), AUX-IN(auxiliary input) and BT(Bluetooth) modes.

Audio/Menu Setting

-Press Volume (SEL) button momentarily rotate to select Function /Audio/Display/Tuner/Clock/Beep/Animation/Demo mode.

-Press Volume (SEL) button get into Audio mode and rotate Volume button to select manual EQ/X-bass/Preset EQ/Loudness/Fader /Balance.

-Select manual EQ and rotate Volune button to select 10 different band EQ. Once select desired EQ band then rotate volume button left or right to adjust level.

- Select X-bass and rotate voume button to switch ON/OFF.

-Select Present EQ then rotate volume button to select USER/FLAT/CLASSIC/ROCK/POP/JAZZ/COUNTRY

130.com.ua

Autogoods “130”

AUDIO/MENU SETTING

-Select Loudness and rotate volume button to switch ON/OFF.

-Select Fader and rotate volume button to adjust Front or Rear position.

-Select balance and rotate volume button to adjust Left or Right position.

Display Setting

-Press Volume button momentarily rotate to select Color select /Radio text/ID3 Tag.
-Select Color selection and rotate volume button to select desire color.
-Select CUSTOM R/G/B to adjust each GREEN/RED/BLUE color level.
-Select RADIO TEXT and rotate to switch ON/OFF.
-SELECT ID3 TAG and rotate to switch ON/OFF.

Tuner Setting

-Select Tuner and rotate to select LOCAL SEEK/MONO SET/REGIONAL /RDS SET/TA SET/AF SET/EON SET/PI REGIONAL/PTY SEARCH/
-Select LOCAL SEEK and rotate volume button to switch ON/OFF.
-Select MONO SET and rotate volume button to switch ON/OFF.
-Select REGIONAL and rotate volume button to select EUROPE /USA/ASIA/RUSSIA.
-Select RDS SET and rotate to volume button switch ON/OFF.
-Select TA SET and rotate volume button to switch ON/OFF.
-Select AF SET and rotate volume button to switch ON/OFF.
-Select EON SET and rotate volume button to switch ON/OFF.
-Select PI REGIONAL and rotate volume button to switch ON/OFF.
-Select PTY and rotate to select different stations.

130.com.ua

AUDIO/MENU SETTING

Clock Setting

Select CLOCK and rotate to select CLOCK FORMAT/CLOCK ADJUST /DATE FORMAT/DATE SET/TIME SYNC.

-Select CLOCK FORMAT and rotate to select 12H or 24H.

-Select CLOCK ADJUST to adjust your time.

-Select DATE FORMAT/DATE SET to adjust your DATE/MONTH/YEAR.

-Select TIME SYNE and rotate to switch ON/OFF.

Beep Setting

-Select BEEP and rotate to switch ON/OFF.

Animation Setting

-Select and rotate to select time interval for Animation.

DEMO MODE Setting

-Select and rotate to switch DEMO MODE ON/OFF.

Auxiliary Input Jack

Using a 3.5mm cable to connect a external device such as MP3 players, CD players etc. to the auxiliary input jack on front panel. Then you can hear the sound of other playback devices such as MP3 players, CD players etc. through your car speakers.

Reset

Push the **RESET** button(behind the front panel) with a thin object with a pointed end to reset the unit over 6 seconds back to the factory default settings.

130.com.ua

Autogoods “130”

RADIO OPERATION

Change Bands
In radio mode, shortly press the **BAND/DISP** to select between the FM1, FM2, FM3(F3) and AM1(MW1), AM2(MW2) bands.

To Store / Recall Preset Stations
The radio can be stored 6 preset stations for each band (FM1, FM2, FM3, AM1 and AM2) for a total of 30 preset stations.
- To memorize a station:
Press and hold the desired preset buttons (1-6) to save a radio station.
- To recall a preset station:
Briefly press the respective station button (1-6) to recall the corresponding preset station.

Manual Tuning
In the radio mode:
Press and hold the **>>I** or **I<<** button to enter the manual tuning mode, then briefly press the **>>I** or **I<<** button to search the next or previous frequency step by step. Press and hold **>>I** or **I<<** to advance quickly.

Seek Tuning
In radio mode, briefly press the **>>I** or **I<<** to seek to previous or next strong station.

Automatic Store Preset Station
Press and hold **AS** for more than 2 seconds to store 18 FM stations and 12 AM(MW) stations automatically.

Item	Selectable Setting
RDS On/Off	Shortly press the Volume button to choose the "AREA EU" Station. The system will change to the frequency setting within 3 seconds.
PTY ↵ (Program type)	Once into the PTY mode, press the ⏻ 🔇 get into program type item, and rotating encoder volume knob to selected category. ■ **Available Program Type:** POP M; ROCK M; EASY M; LIGHT M; CLASSICS; OTHER M;JAZZ M; COUNTRY; NATION M; OLDIES M; FOLK M; A-TEST; ALARM; NEWS; AFFAIRS; INFO; SPORT; EDUCATE; DRAMA; CULTURE; SCIENCE; VARIED; WEATHER; FINANCE; CHILDREN; SOCIAL; RELIGION; PHONE IN; TRAVEL; LEISURE; DOCUMENT
AF (Alternate Frequencies)	■ ON: The unit will be searching for another station with stronger signal, but with the same program identification as the current station automatically. ■ OFF: Cancel
TA (Traffic Announcement)	■ ON: When there is traffic announcement, the unit switches to the tuner mode (regardless of the current mode) and begins to broadcast the announcemet on traffic conditions. When the traffic announcement is over, it returns to the previous mode. ■ OFF: Traffic announcement does not cut in.

130.com.ua

Autogoods “130”

USB OPERATION

If you would like to playback files contained in a USB stick, please insert the stick into the USB port. The MP3/WMA and other music files will be played automatically.
Note: The USB port of this car radio is also designed for charging for iPhone/android mobile phone. The charging current consumption is 1 ampere.

Select Next Track or Previous Track
In the USB mode, briefly press the ⏭ or ⏮ button to play the next or previou track.

Faste Forward/Backward
Press and hold the ⏭ or ⏮ button to fast forward or backward a track.

Play / Pause
Press the ⏯ button to interrupt the playback of a music (pause function). Press this button again to continue the playback.

Introduction Scan
Press **INT** to plays first 10 seconds of each track.
Press again to cancel the INT function.
- INT ON - Plays the first 10 seconds of each track.
- INT OFF - Cancels the INT function.

Repeating the track
Press **RPT** to toggle between RPT FLD, RPT ALL, and RPT ONE.
- RPT FLD - Continuously repeats all files in current folder.
- RPT ALL - Plays all tracks on USB device.
- RPT ONE - Continuously repeats selected track.

Playing all tracks in random
Press **RDM** to play songs in random order, press again to cancel the RDM function.
- RDM ON - Plays all tracks in random order.
- RDM OFF - Cancels the RDM function.

Folder/Track Navigation
- Press the 📁 or 📁 button to select the previous or the next folder. Folder access is only available on devices with more than one folder.

- Press and hold the 📁 or 📁 buttons to jump 10 tracks backward or forward. It is required that over 10 tracks be available on the storage medium.

Autogoods “130”

BLUETOOTH OPERATION

Pair and Connect
Before using the Bluetooth device as a handsfree system for a Bluetooth enabled mobile phone for the first time, you must pair and connect the two devices as follows:

1. In any mode, prior to pairing and connecting, the BT logo on the LCD indicating that no device is connected. The head unit broadcasts the pairing signal constantly when no devices are connected. Activate the Bluetooth on your device before beginning the pairing process.
2. When your phone finds the car audio system, the "NQ721BE" name will be displayed on your phone screen.
3. Choose the "NQ721BE" from your mobile phone list to pair and connect with the car audio system. Upon confirming, the BT logo will stop flashing.
4. When pairing is complete, the mobile phone audio will automatically transfer to the car audio system whenever a call is made or received, or when the mobile phone plays music.

Note:
For more details of bluetooth pairing, please refer to the owner's manual for your mobile phone.

Make a Call
• To make a call, dial the call directly from the paired mobile phone.

Redial Last Dialed Number
Press and hold the button to redial the last dialed phone number.
Press the button to activate SIRI function.

Answer a Call
• When the mobile phone is called, the incoming telephone number displays on the LCD display, press the button to answer the incoming call.

Reject or End a Call
Press the button to reject, press and hold the to end the call.

Switch Audio Between Car Audio and mobile Phone
During a call, press the button to switch the audio source from the car audio system back to your mobile phone.

130.com.ua

Autogoods "130"

Adjust Call Volume
- During a call, use **Volume** knob or **VOL+/VOL-** button to adjust the call volume level.
- Use the **MUTE** button to mute sound.

Audio Streaming (A2DP)
The head unit supports A2DP wireless streaming audio from a Bluetooth mobile device directly to your head unit.

The following functions can be used to control the music:

- Press the ⏭ button to skip to the next available audio track.
- Press the ⏮ button to skip to the previous audio track.
- Press the ⏯ button to toggle between play and pause during music playback.

APP OPERATION

Using the application from NAKAMICHI, you can wireless remote control the car audio of NQ721BE head unit with Apple & Android devices.

Please go to the APPLE APP Store or Google Play Store and search NAKAMICHI app, after downloading the APP, install it on your Apple & Android devices.

Connect your smartphone to NQ721BE through bluetooth,then tap the APP and turn on it on your smartphone.

Now you can control the audio of NQ721BE head unit by your smartphone.

Autogoods “130”

SPECIFICATIONS

General

Power supply Requirement :	DC 12V
Maximum power output :	50W X 4CH
Speaker impedance :	4 - 8 Ohm
Unit Dimensions(WxHxD) :	178 X 108 X 50 mm
Weight:	0.5 kg
Fuse :	10 A

RADIO

FM

Frequency Range:	87.5 MHz - 107.9 MHz (USA) 87.5 MHz - 108.0MHz (EUROPE)
Channel step:	200 KHz(USA) 50 KHz(EUROPE)

AM

Frequency Range:	530 KHz - 1710 KHz (USA) 522-1620 KHz(EUROPE)
Channel step:	10 KHz(USA) 9 KHz(EUROPE)

USB

Usable Audio Formats:	MP3/WMA/FLAC
USB Port Type:	2.0
USB Charging:	5V/1A
Frequency Response:	20 Hz - 20KHz
S/N Ratio:	60dB

BT

BT Profile supports:	A2DP, AVRCP, HFP
Range of frequency:	2.4GHz spectrum

FCC WARNING

This device complies with Part 15 of the FCC Rules. Operation is subject to the following two conditions: (1) this device may not cause harmful interference, and (2) this device must accept any interference received, including interference that may cause undesired operation.

130.com.ua

FCC WARNING

This device complies with Part 15 of the FCC Rules. Operation is subject to the following two conditions:

(1) this device may not cause harmful interference,

(2) this device must accept any interference received, including interference that may cause undesired operation.

Caution:

The user is cautioned that changes or modifications not expressly approved by the party responsible for compliance could void the user's authority to operate the equipment.

Note:

This equipment has been tested and found to comply with the limits for a Class B digital device, pursuant to part 15 of the FCC Rules. These limits are designed to provide reasonable protection against harmful interference in a residential installation. This equipment generates uses and can radiate radio frequency energy and, if not installed and used in accordance with the instructions, may cause harmful interference to radio communications. However, there is no guarantee that interference will not occur in a particular installation. If this equipment does cause harmful interference to radio or television reception, which can be determined by turning the equipment off and on, the user is encouraged to try to correct the interference by one or more of the following measures:

—Reorient or relocate the receiving antenna.

—Increase the separation between the equipment and receiver.

—Connect the equipment into an outlet on a circuit different from that to which the receiver is connected.

—Consult the dealer or an experienced radio/TV technician for help.

130.com.ua

130.com.ua

CONNECT WITH US

nakamichicaraudio.com
Nakamichi.Global
nakamichi.caraudio