PHONES
0 (800) 800 130
(050) 462 0 130
(063) 462 0 130
(067) 462 0 130

130 COM.UA

Internet store of autogoods

SKYPE
km-130

CAR RECEIVERS — Receivers • Media receivers and stations • Native receivers • CD/DVD changers • FM-modulators/USB adapters • Flash memory • Facia plates and adapters • Antennas • Accessories | CAR AUDIO — Car audio speakers • Amplifiers • Subwoofers • Processors • Crossovers • Headphones • Accessories | TRIP COMPUTERS — Universal computers • Model computers • Accessories | GPS NAVIGATORS — Portable GPS • Built-in GPS • GPS modules • GPS trackers • Antennas for GPS navigators • Accessories | VIDEO — DVR • TV sets and monitors • Car TV tuners • Cameras • Videomodules • Transcoders • Car TV antennas • Accessories | SECURITY SYSTEMS — Car alarms • Bike alarms • Mechanical blockers • Immobilizers • Sensors • Accessories | OPTIC AND LIGHT — Xenon • Bixenon • Lamps • LED • Stroboscopes • Optic and Headlights • Washers • Light, rain sensors • Accessories | PARKTRONICS AND MIRRORS — Rear parktronics • Front parktronics • Combined parktronics • Rear-view mirrors • Accessories | HEATING AND COOLING — Seat heaters • Mirrors heaters • Screen-wipers heaters • Engine heaters • Auto-refrigerators • Air conditioning units • Accessories | TUNING — Vibro-isolation • Noise-isolation • Tint films • Accessories | ACCESSORIES — Radar-detectors • Handsfree, Bluetooth • Windowlifters • Compressors • Beeps, loudspeakers • Measuring instruments • Cleaners • Carsits • Miscellaneous | MOUNTING — Installation kits • Upholstery • Grilles • Tubes • Cable and wire • Tools • Miscellaneous | POWER — Batteries • Converters • Start-charging equipment • Capacitors • Accessories | MARINE AUDIO AND ELECTRONICS — Marine receivers • Marine audio speakers • Marine subwoofers • Marine amplifiers • Accessories | CAR CARE PRODUCTS — Additives • Washer fluid • Care accessories • Car polish • Flavors • Adhesives and sealants | LIQUID AND OIL — Motor oil • Transmission oil • Brake fluid • Antifreeze • Technical lubricant

In store "130" you can find and buy almost all necessary goods for your auto in Kyiv and other cities, delivery by ground and postal services. Our experienced consultants will provide you with exhaustive information and help you to chose the very particular thing. We are waiting for you at the address

https://130.com.ua

DRAGON
WINCH

130.com.ua

www.dragonwinch.co.uk

IMPORTANT

For your safety and the safety of others, follow the recommendations below. Misuse of the winch may be extremely dangerous for you and for other people and may lead to serious damage. Before starting to use your winch, read and follow the instructions below carefully.

CONTENTS

Safety precuations.....34

Principles of winch operation.....35

Assembly of the winch.....35

Lubrication and maintenance of the winch 35

Connecting and installing of the electric winch.....39

Operation of the winch.....50

Service of the winch.....51

Winch power.....52

Declarations of conformity.....54

Winch Parameters.....56

Warranty Conditions.....63

130.com.ua

Clothing

Do not wear loose clothing or jewellery which may be caughtby moving elements.

Always wear leather clothes when holding the winch rope.

Do nit hold the steel rope with bare hands, since even minor cracks on the line may cause injuries.

It is recommended to wear non-slip shoes.

Use headgear and pin up long hair.

WARNING

Remember *about protective gloves.*

Keep safe distance

Make sure unauthorized people are kept at appropriate distance from the working winch and its rope. The recommended distance is 1.5 times rope length.

REMEMBER THAT BREAKING ROPE MAY CAUSE SEVERE INJURIES OR EVEN DEATH TO THE PEOPLE IN ITS WAY.

Do not cross stretched rope and do not stand over the rope.

WARNING

Remember *that breaking rope may cause severe injuries or even death to the people in its way.*

Do not overload the winch

The details describing the winch capacity provided in the manual are the maximum, not working parameters. Remember that the winch pull force parameters are specified for ideal conditions which do not consider land elevation, terrain obstacles, etc. Therefore, remember to select the winch that is appropriate to your needs. Details of the selection are specified further on in the manual.

If the motor is overheated, stop working for a couple of minutes and let it cool down.

If the motor stops, disconnect power supply and diagnose the cause.

WARNING

The details *describing the winch capacity provided in the manual are the maximum, not working parameters.*

Avoid accidental starting of the winch

If the winch is unused, it must be mechanically taken off from the power supply on the positive cable (+) by high current connector. If the winch is unused, leave the gear handle on the position “OUT”.

Control of the technical condition

Before each starting of the winch, check it for damages. Repair or replace any defective or damaged parts.

130.com.ua

Repairing the winch

Use only original parts. If they are not available, use parts with appropriate attestations and safety certifications.

Repairing of a damaged rope consists in shortening it below the damaged place.

WARNING

***Repairing** of a damaged rope consists in shortening it below the damaged place.*

Winding the rope

Always use gloves.

Pay attention to the correct direction of winding the rope. The rope must be winded from the bottom of the winch drum (between the mounting plate and the drum). Wrong direction of winding the rope may cause serious winch damage.

The rope must be wound uniformly – fake next to fake – on the winch drum in such manner as to avoid building up of the rope in one place or to jam the rope below the lower layers. Incorrect rope winding greatly lowers the efficiency of the winch and may lead to damaging the equipment.

After finishing the work, the rope should be pulled in (laid in the drum) unloaded. Hold the tightened rope in one hand and the winch remote control in the other. For your own safety, stand at the distance of minimum 1.5 m from the winch while winding.

WARNING

***The rope** must be wound uniformly – fake next to fake.*

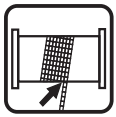

PRINCIPLES OF WINCH OPERATION

IMPORTANT

Proper operation, maintenance and storage are of essential importance for the winch efficiency and life. For your own and other people's safety, read this manual carefully and follow its recommendations. Misuse of the winch may lead to an accident or serious damage.

Recommendations

The load should be pulled in a straight line. If it is necessary to pull the load at an angle, use appropriate pulley block.

When pulling the load, pay attention to correct arrangement of the rope on the drum. It is essential that the rope is not wound in one place and to avoid jamming of the rope between previous fakes. In such cases unwind the rope and start winding again.

130.com.ua

The winch remote control should be stored inside the car. Before each connection check its technical condition.

The winch is equiped with manual engaging and releasing the gear. Load pulling is started with the gear on. Do not disconnect and switch on the gear while the motor is running.

To avoid damaging the rope, do not install hooks directly on the rope. It isnecessary to use the factory-provided thimble (eye) or pulley block with a movable pulley with a movable pulley.

Observe the winch carefully during work, keeping at a maximum possible distance. It is recommended that the pulling process is stopped every meter to check if the rope is wound correctly.

It is not recommended to attach the rope to the tow hook of the pulled vehicle. The rope should be attached to the vehicle frame.

Using a pulley block allows to increase the winch pull capacity. Pulling the load using a double rope (thanks to a pulley block) nearly doubles the winch capacity, however it reduces the rope range and pulling speed in half. Remember to place the vehicle centrally, distributing the load uniformly on both sections of the rope.

Do not wrap the rope directly around a tree. Use appropriate synthetic bands or protection.

To connect the winch rope with a chain or another rope, it is recommended to use omega-type shackles.

Removing the rope from the winch, remember to leave minimum 3 (recommended 5) fakes of the line on the drum. Complete removal of the rope and starting the winch under the load may result in pulling out the rope attachment from the drum, damaging the equipment and serious injuries of the people nearby.

It is recommended to put a blanket or car mat on the rope of the winch in operation. Should the rope break, this will make direct it to the ground. It is also recommended to open the car bonnet to protect windscreen in such a case.

The winch rope should be tensioned throughout the use. This prevents “bending” and tangling of the rope. If the rope starts to tangle or bend, unwind it partially and start winding again. If this does not work, ease the rope and straighten it manually.

To stabilize the car while pulling the load, it is recommended to use stop blocks.

WARNING

***Using** a pulley block allows to increase the winch pull capacity. Pulling the load using a double rope (thanks to a pulley block) nearly doubles the winch capacity, however it reduces the rope range and pulling speed in half. Remember to place the vehicle centrally, distributing the load uniformly on both sections of the rope.*

Wireless remote control

Tree strap

Shackle

130.com.ua

Battery

Must be efficient, charged and of appropriate Ah capacity.

Use protective gloves and goggles when handling the battery.

The car engine should be running during winch operation.

Winch rope

The strength of the steel rope provided with the winch is appropriate to the power and intended use of each specific winch.

Diameter and length of the rope may vary within the dame winch type, maintaining the same strength and safety parameters.

Before using the winch, make sure the rope is not damaged.

Do not use the winch if the rope is damaged.

Do not repair the rope. A defective rope must be replaced with a new one or shorten and end with a thimble. Your safety depends on this.

Do not use the winch rope as a tow-rope.

When pulling the load, use the winch only and do not “help” the winch with car drive.

Life of the rope is directly dependent on its use and storage. Overloading the winch may result in damaging the rope.

WARNING

***Before** using the winch, make sure the rope is not damaged.*

WARNING

Do not** repair the rope. A defective rope must be replaced with a new one or shorten and end with a thimble. **Your safety depends on this.

Safety

Do not attempt to overload the winch above its permitted limits.

Remember that the maximum pull force specifies the capacity of the winch in absence of any obstacles and loadings and on the first rope fake on the drum.

Each obstacle (slope, mud, water, slushy area etc.) the following, considerably reduce the pull capacity of your winch.

Any jerks while pulling are very dangerous and may lead to breaking the line, damage to the winch as well as serious injuries.

Despite the fact that in the description of the winch power the term “vertical pull force” is used, under no circumstances can the winch be operated to lift loads vertically. both the winch and the rope are not adapted to such use. the term “vertical pull force” is only used to specify the power and technical parameters of the winch.

WARNING

The winch can not be operated to lift loads vertically.

130.com.ua

ASSEMBLY OF THE WINCH

Pay special attention not to skew the winch during assembly as this may lead to its permanent damage.

The winch shall be assembled in a suitable place.

The power of the winch must be adapted to the vehicle, place and assembly type.

The winch shall be assembled on a stable steel frame, using a 4-point or 8-point assembly system. The winch must be assembled horizontally.

It is very important to assemble the winch on a flat surface, technologically adapted to support the winch.

Using a special assembly plate of 6 mm minimum is recommended. The original screws are adapted to the mounting plate with a thickness of 6mm. In case of using a thicker plate, screws must be replaced with new ones of appropriate length and at least the same hardness.

Rope roller guide should be assembled in a way that facilitates pulling the rope in and out.You can not assembly the rope directly to the winch. Roller guide must be attached to the mounting plate.

WARNING

***In case** of lack of space at the assembly of the winch it is possible to rotate the gear with handle on any angle.*

IMPORTANT

While screwing current wires always block the lock nut by the second spanner.

LUBRICATION AND MAINTENANCE OF THE WINCH

A new winch is factory-protected and does not require additional preservation procedures.

The winch requires periodical maintenance and technical overhauls depending on the way and conditions in which it was operated.

The periodical maintenance consists in: disassembly, cleaning, replacement of greases, replacement of worn winch components.

Steel rope shall be periodically lubricated using appropriate penetrating oil.The warranty does not cover the rope after the first unwind. Check before use that the new rope is not damaged.

Also, keep all components of the winch clean.

Wet winch and controller box must be dried, cleaned and protected.

In case of using the winch in difficult conditions (rallies, water, mud), check the technical condition of the winch.

130.com.ua

CONNECTING THE WINCH TO THE ELECTRICAL INSTALLATION

IMPORTANT

If the winch was selected properly to the vehicle, the electrical installation should be sufficient to power it. Before starting the winch, make sure the battery is operational and fully charged and the electrical connections were made correctly. During the operation of the winch, vehicle engine should be running to assure constant charging of the battery. Connecting the winch to the electricalinstallation follow the instructions below.

Connecting the winch with a motor featuring additional stator power supply (five wires coming out of the controller):

1. Connect the short red cable with red shield (B') to the red terminal (B) on the motor.
2. Connect short black cable (D') to the black terminal (D) on the motor.
3. Connect short black cable with yellow shield (C') to the yellow terminal (C) on the motor.
4. Connect thin black cable (a') to the lower terminal (A) on the bottom of the motor.
5. Connect long red positive cable (+) to the positive terminal (+) end of the battery by high current connector.
6. Connect the long black cable (1.8 m) to the bottom terminal (A) on the motor, and connect the other end of the cable to the negative (-) end of the battery.

Refers to: DWM 8000 HD, DWM 10000 HD, DWM 12000 HD, DWM 13000 ST, DWH 9000 HD, DWH 10000 HD, DWH 12000 HD, DWH 15000 HD, DWH 18000 HD

130.com.ua

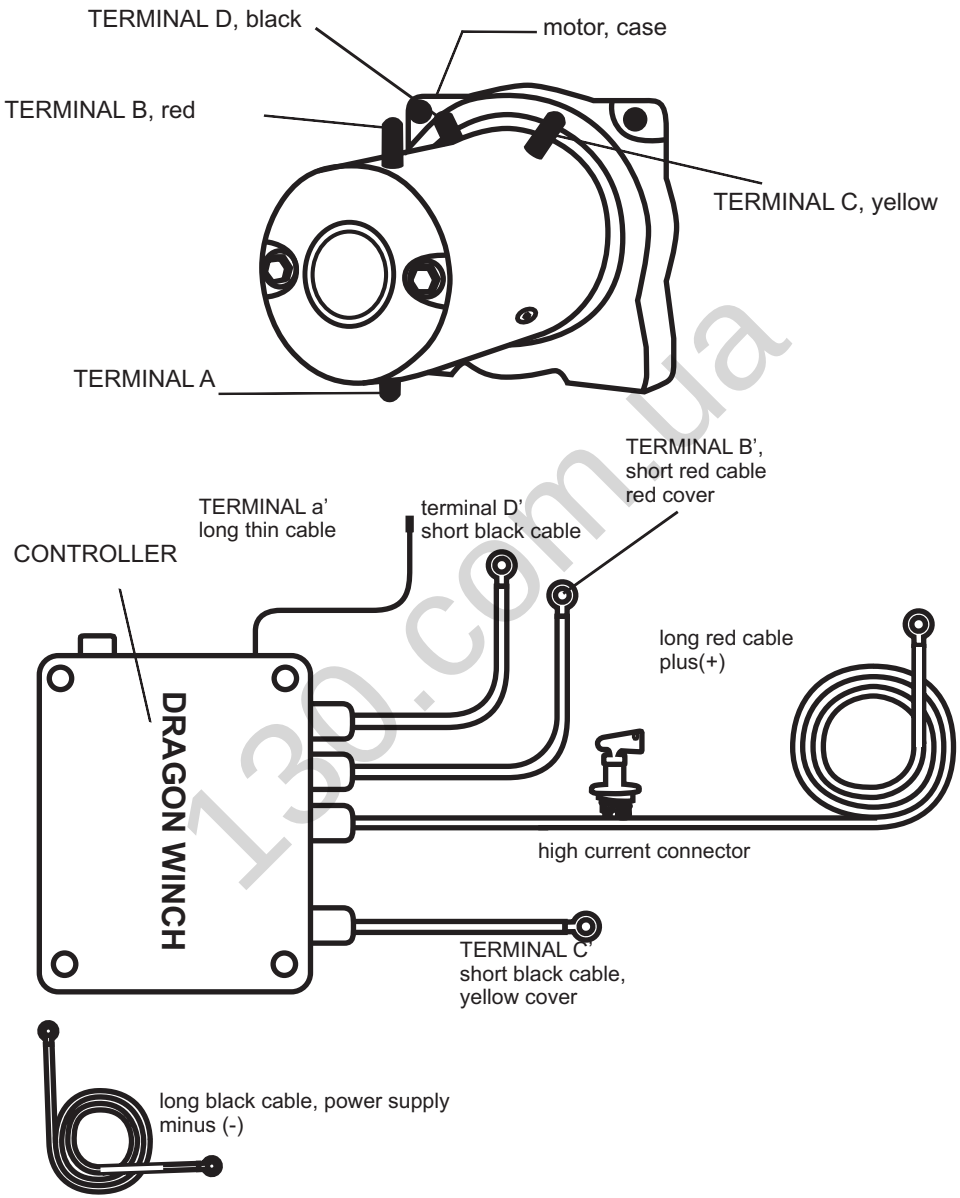
TERMINAL D, black
motor, case
TERMINAL B, red
TERMINAL C, yellow
TERMINAL A
TERMINAL B',
short red cable
red cover
TERMINAL a'
long thin cable
terminal D'
short black cable
CONTROLLER
long red cable
plus(+)
DRAGON WINCH
high current connector
TERMINAL C'
short black cable,
yellow cover
long black cable, power supply
minus (-)

130.com.ua

Connecting the winch with a motor without additional stator power supply (four wires coming out of the controller):

1. Connect Short black cable (A) to the black terminal (A) on the motor.
2. Connect short red cable (B) to the red terminal (B) on the motor.
3. Connect the long, black cable (-), to the negative (-) end of the battery.
4. Connect long red positive cable (+) top the positive (+) end of the battery by high current connector.

Refers to: DWM 6000

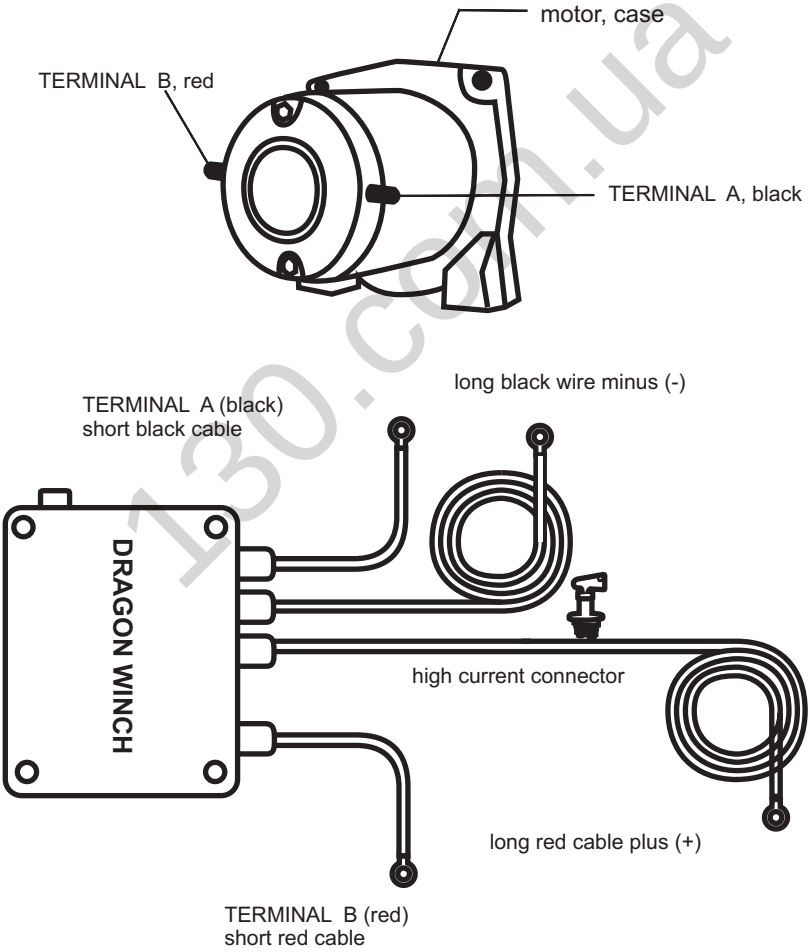

130.com.ua

Connecting of the winch with aluminum relay box:

1. Wired remote control and wireless remote control installation are appropriately connected and do not require user interference.
2. The set includes 2 electric wires (red and black) to connect the winch to the car electrical installation.
3. The red wire (connected permanently to the relay box) is connected to the positive (+) end of the battery by high current connector.
4. The black wire (supplied separately with the winch set) is connected with one end to the terminal placed in the lower part of the winch motor, and with the other end to the negative (-) end of the battery.

Refers to: DWM 12 000 HDI

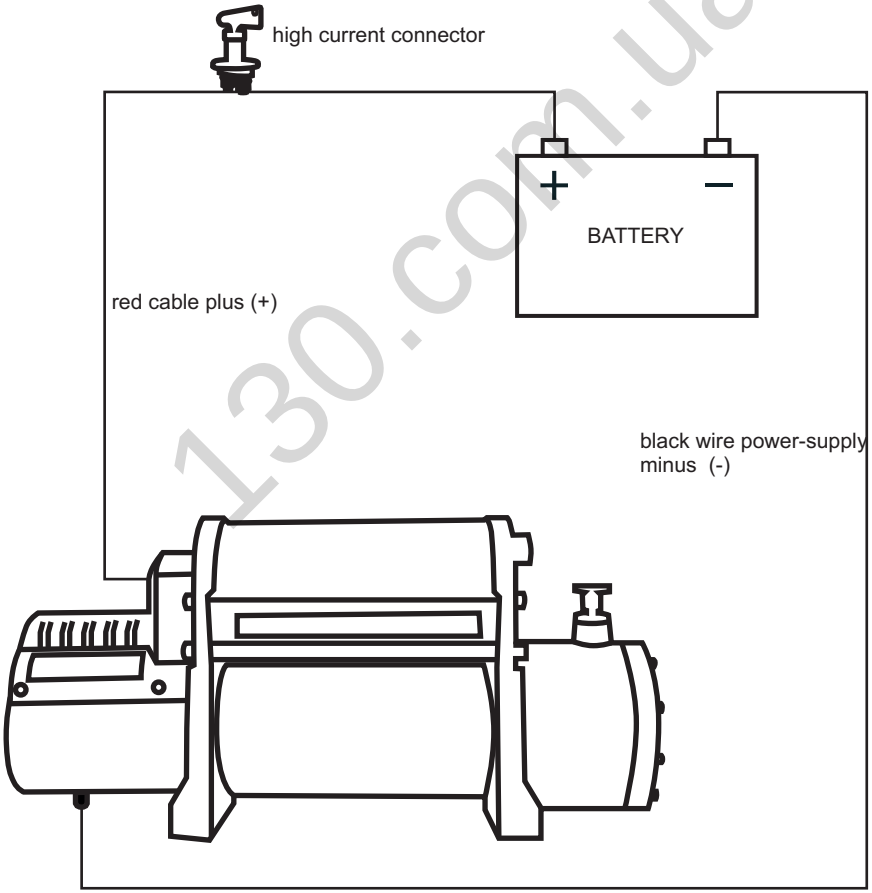

130.com.ua

Connecting of the winch with relay box on the moto:

1. Wired remote control and wireless remote control installation are appropriately connected and do not require user interference.
2. The set includes 2 electric wires (red and black) to connect the winch to the car electrical installation.
3. The red wire (connected permanently to the relay box) is connected to the positive (+) end of the battery by high current connector.
4. The black wire (supplied separately with the winch set) is connected with one end to the terminal placed in the lower part of the winchmotor, and with the other end to the negative (-) end of the battery.
5. Connect black cable to the terminal placed in the lower part of the winch motor.

Refers to: DWM 13000 HD, DWT 14000 HD, DWT 15000 HD, DWT 16800 HD

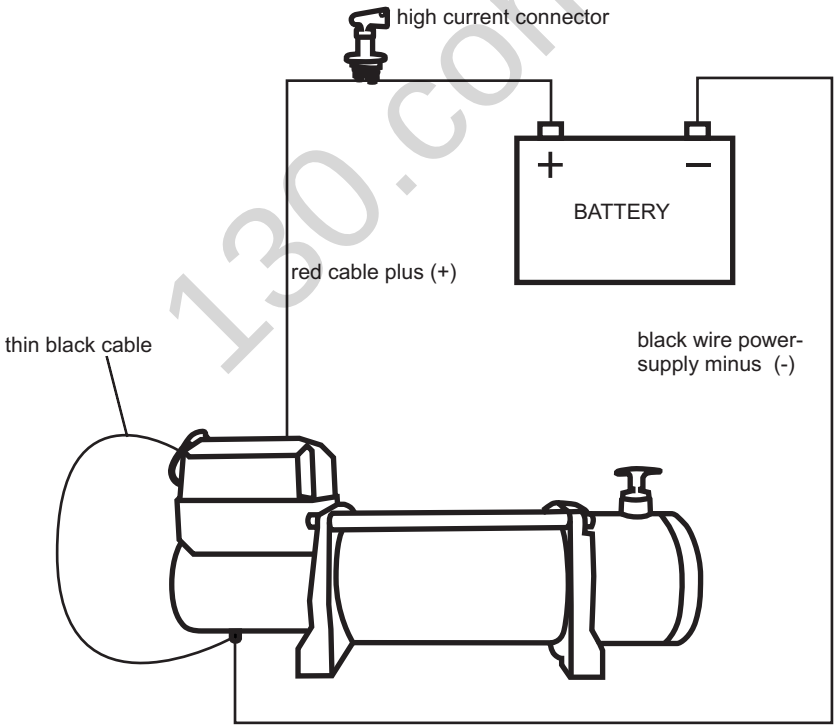

130.com.ua

Connecting of the winch with relay box on the motor:

1. Wired remote control and wireless remote control installation are appropriately connected and do not require user interference.
2. The set includes 2 electric wires (red and black) to connect the winch to the car electrical installation.
3. The red wire (connected permanently to the relay box) is connected to the positive (+) end of the battery by high current connector.
4. The black wire (supplied separately with the winch set) is connected with one end to the terminal placed in the lower part of the winch motor, and with the other end to the negative (-) end of the battery.

Refers to: DWH 12000 HDV, DWT 18000 HD, DWT 20000HD

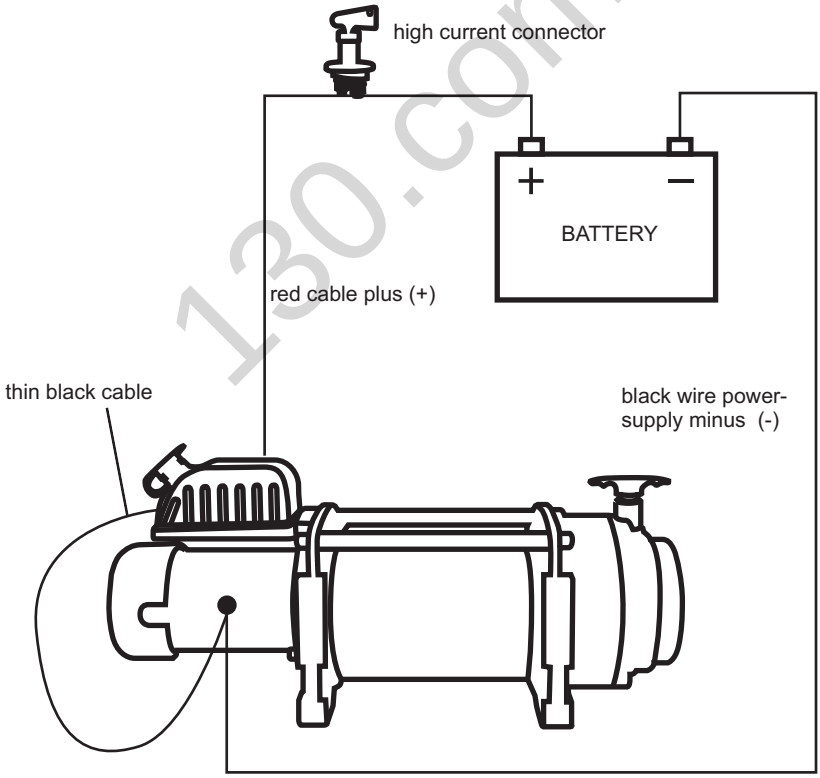

130.com.ua

Connecting of the ATV and UTV winch with the external relay version A (see scheme) :

1. Wired remote control and wireless remote control installation are appropriately connected and do not require user interference.
2. The unit includes 2 pairs of electric wires (2 red and 2 black ones) to connect the winch to the quad electric installation.
3. The first pair of the wires (red and black) is used to connect the winch motor to the relays as follows:
    a. On one side screw the red positive cable (A) under the screw A' nut marked red and on the other by a high current connector (for example safety switch), connect to the positive end of the battery;
    b. On one side black negative cable (B) screw under the screw (B') nut marked black and on the other connect with the negative end of the battery; short blue wire coming out from the relay which is factory connected to the screw (B') nut black marked.
4. The second pair of the wires (black and red) is used to connect the relay with the winch motor as follows:
    a. On one side screw the red positive cable (D) under the screw D' nut and on the other to the positive terminal on the winch motor;
    b. On one side screw the black negative cable (C) under the screw C' nut and on the other to the negative terminal(-) on the winch motor.
5. Remote control connects to the relay by wires of the remote control with relay wires (green and black) by connectors. The red wire screw under the relay screw A' nut marked red.

Refers to: DWM 2500 HD, DWM 3000 HD, DWM 3500 HD, DWH 2500 HD, DWH 3500 HD, DWH 4500 HD, DWH 4500 LHD

130.com.ua

IMPORTANT

For your safety after the operation of any winch always remember to take off the power (by taking off the mechanical electrical switch).

High current connector (for example safety switch) allows to turn off the winch in case of emergency and to take off it safely when it is not used.

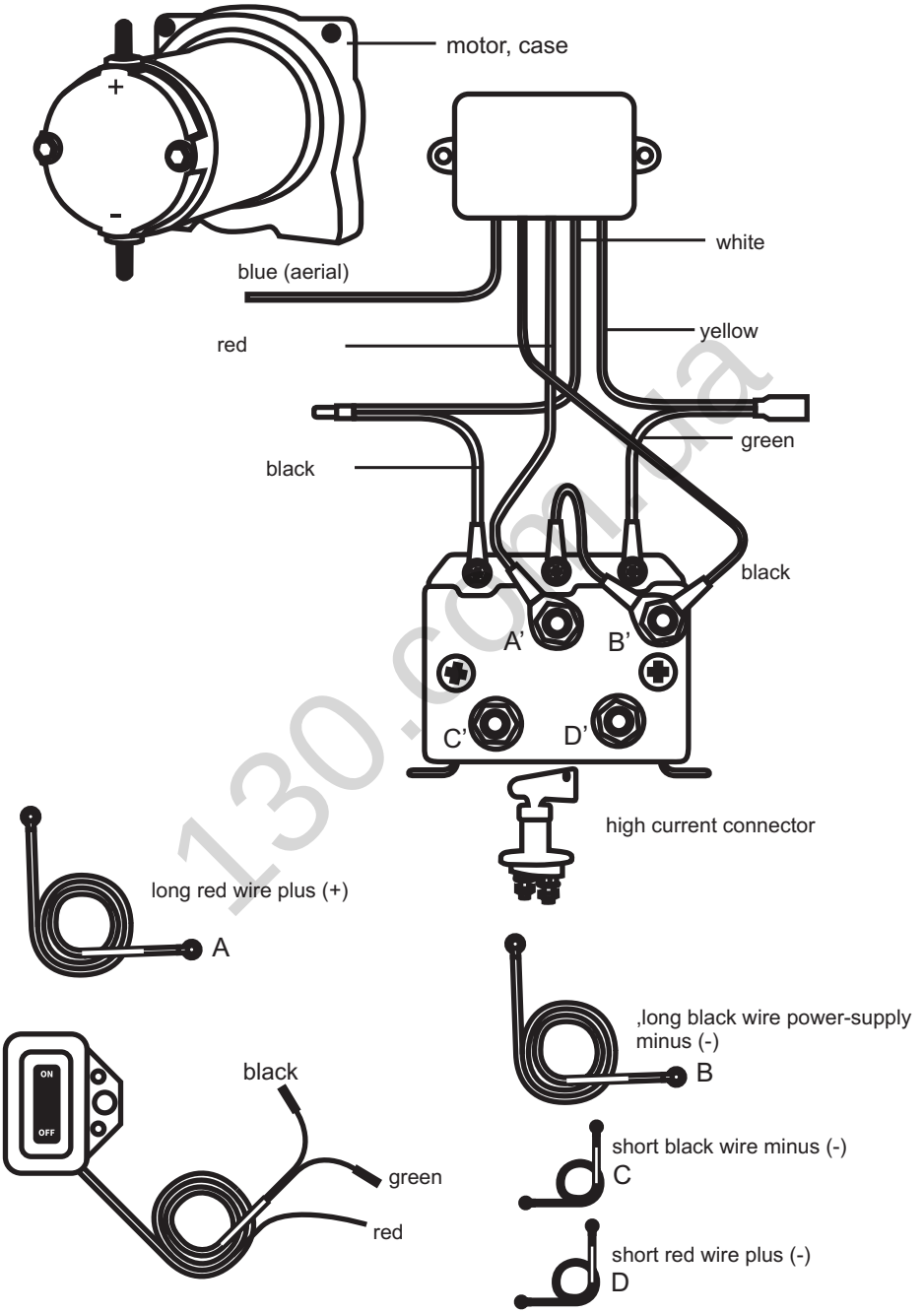
motor, case
+
-
white
blue (aerial)
red
yellow
green
black
black
A'
B'
C'
D'
high current connector
long red wire plus (+)
A
,long black wire power-supply
minus (-)
B
ON
OFF
black
green
red
short black wire minus (-)
C
short red wire plus (-)
D

130.com.ua

Connecting of the ATV and UTV winch with the external relay version B (see scheme):

1. Wired remote control and wireless remote control installation are appropriately connected and do not require user interference.
2. The unit includes 2 pairs of electric wires (2 red and 2 black ones) to connect the winch to the quad electric installation.
3. The first pair of the wires (red and black) is used to connect the winch motor to the relays as follows:
    a. on one side screw the red positive cable (A) under the screw (B+) nut marked red and on the other by a high current connector (for example safety switch), connect to the positive end of the battery;
    b. on one side black negative cable (B) screw under the screw (B') nut marked and on the other connect with the negative end of the battery.
4. The second pair of the wires (black and red) is used to connect the relay with the winch motor as follows:
    a. on one side red positive wire (D) screw under the relay screw (M+) nut yellow marked and on the other to the positive terminal (+) on the winch motor;
    b. o.n one side black positive wire (C) screw under the relay screw (M-) nut blue marked and on the other to the negative terminal (-) on the winch motor.
5. Remote control connects to the relay by wires of the remote control with the relay wires (green and black) by connectors. The red wire screw under the relay screw (B+)nut marked red.

130.com.ua

Refers to: DWM 2500 HD, DWM 3000 HD, DWM 3500 HD, DWH 2500 HD, DWH 3500 HD, DWH 4500 HD, DWH 4500 LHD

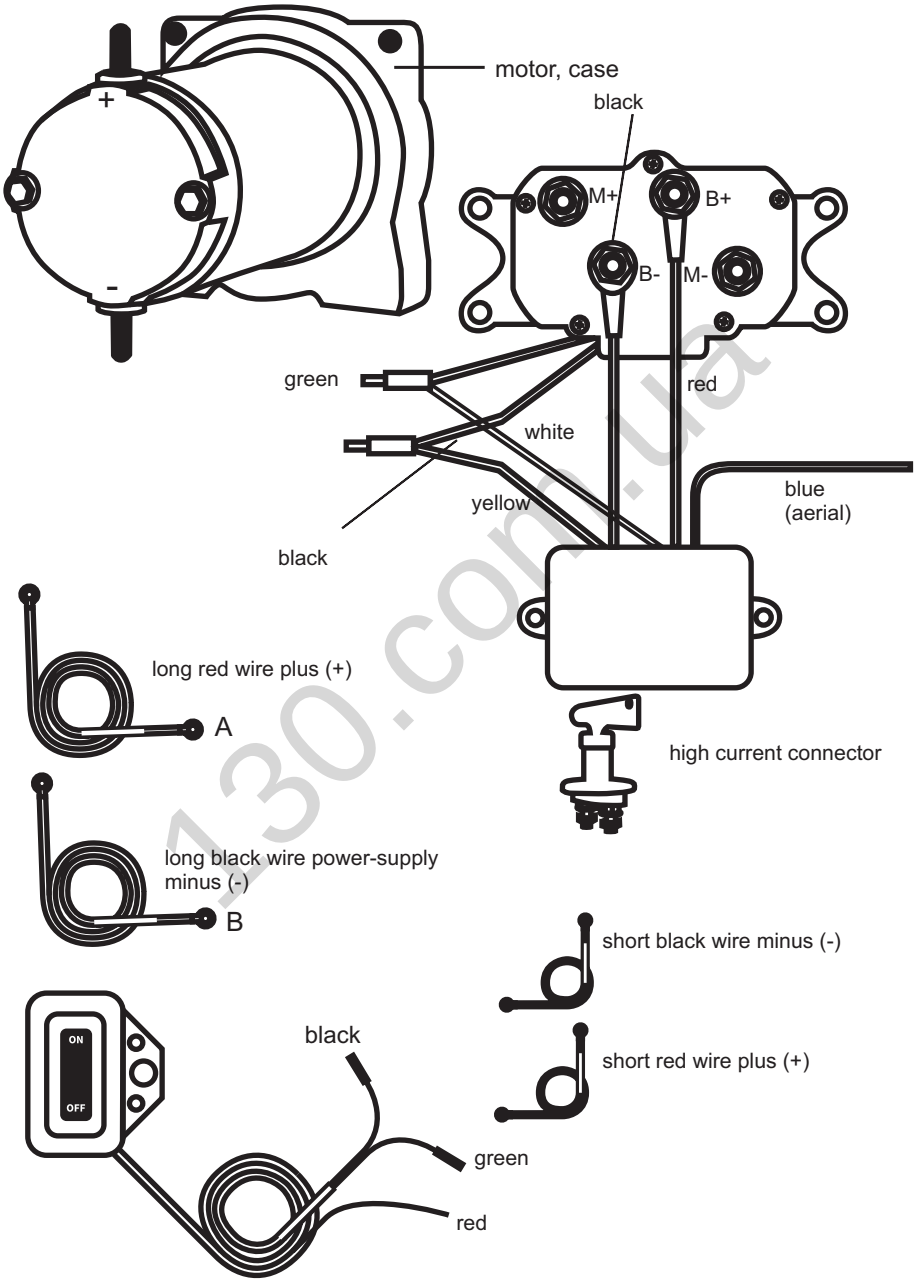
motor, case
+
-
black
M+
B+
B-
M-
green
red
white
yellow
blue
(aerial)
black
long red wire plus (+)
A
high current connector
long black wire power-supply
minus (-)
B
short black wire minus (-)
short red wire plus (+)
ON
OFF
black
green
red

130.com.ua

Connecting of the ATV and UTV winch to the external encapsulated relay unit:

1. Connect short black wires (red and black) to the terminals on the winch motor (A to A' and B to B').
2. Connect long wires (red and black) to the battery. Connect long red positive power cable (+) with the positive battery terminal (+) by the high current connector.
3. Connect remote control to the relay by two wires. Long red wire from the remote control screw to the positive (+) end of the battery.

Refers to: DWM 2000 ST, DWM 2500 ST, DWM 3000 ST

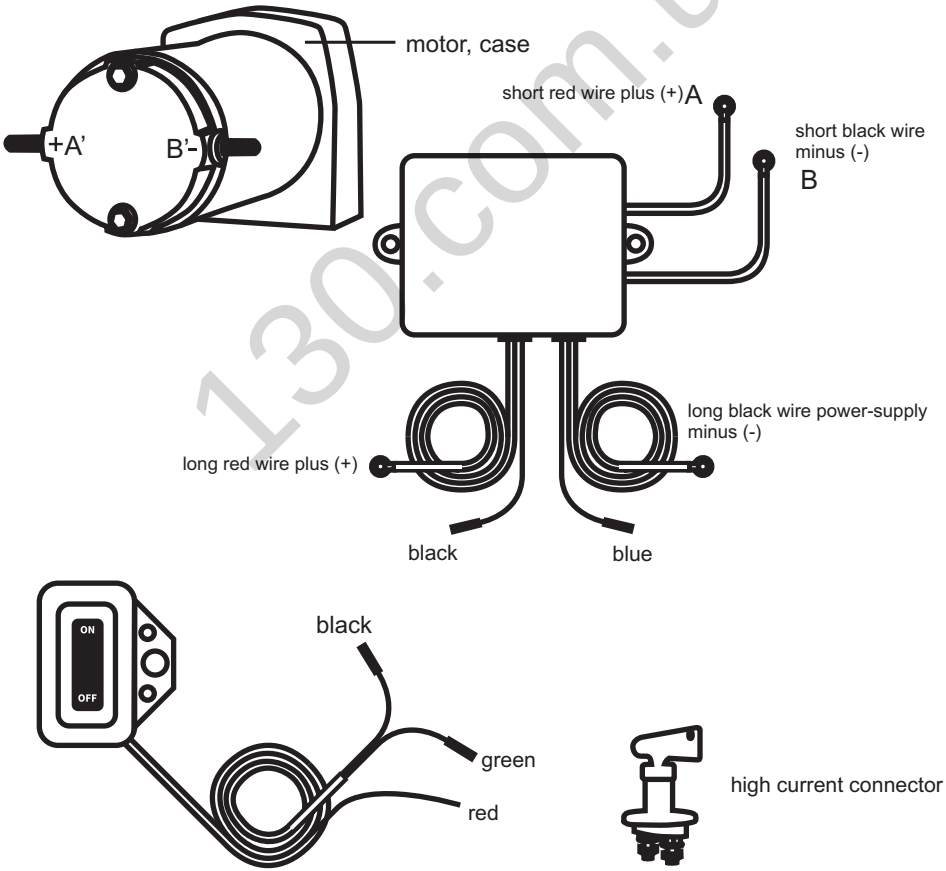

130.com.ua

Remember:
The battery must be in a good condition.

Make sure the electric cables are not caught by the movable elements of the winch or the vehicle.

Check the connections and the cables for damage regularly.

Rust or patina on the wires impacts the performance of the whole unit.

All connections must be kept clean, which will positively impact their life and performance.

OPERATION OF THE WINCH

Recommendation:
Before loading the winch, it is recommended to test its operation by unwinding and winding the rope a few times. It is essential to get to know the correct operation of the winch, both visually and acoustically.

Operation:

If you use the winch to pull another vehicle or a load, pull the hand brake in your car and put stop blocks under the wheels.

Pull appropriate section of the rope and attach it in the appropriate place.

The gear lever located on the gear casing is operated as follows:
1. To disengage the gear, put the lever into “OUT” or „LUZ” position – this will allow to pull out the rope. **DO NOT START THE MOTOR IN THIS POSITION**!
2. To start pulling, move the lever into “IN” or „PRACA” position. Pull the rope to protect the gear. The winch is ready to work. **DO NOT START THE MOTOR BEFORE GEARING.**

Before running, check all connections, rope and cables once more.

Connect the remote control to the winch. For safety reasons, it is recommended to take the driver's seat while pulling.

When pulling your car yourself with the winch, start the engine, release the hand brake, switch the gears to neutral, do not “help” the winch with the car drive.

Control the winch using “IN” and “OUT” buttons located on the controller. Check regularly of the rope is wound on the drum correctly.

If you stop the winch under load, put stop blocks under the wheels or the load. Placing the stop blocks, do not stand behind the vehicle/load.

130.com.ua

Safety

Using the winch with the car drive can provide to the sudden tug of the rope, what may provide to the winch damage.

Pulled car must not be on any gear and an automatic transmission must not be switched to “park.” Otherwise serious damage may occur.

Do not wrap the rope around anchor places. This may lead to damage of these elements and the rope. Use the original thimble (eye) on the line, shackles or pulley block.

Keep at a distance from the winch and rope in operation.

Do not allow third parties to come near the winch or rope in operation. Cracking or sliding rope is a life and injury hazard.

Disconnect the winch when it is not used.

SERVICE

It is recommended to run the winch at least once per month. Unwind and wind the rope a few times using the winch motor. This allows to keep the winch elements in good repair. In case of problems, contact DRAGON WINCH service. Use only authorized replacement parts.

If the winch is used in off-road conditions, a regular maintenance is necessary (see “Lubrication and Maintenance of the winch”).

130.com.ua

IMPORTANT

The parameters specified in the manual and descriptions are maximum parameters, not working parameters. For your own and other people's safety, do not load the winch more than up to 80% to select the winch correctly to your needs, contact DRAGON WINCH distributor.

The winch pull force depends also on the slope inclination. Below, are the maximum load weights the winch can pull, depending on the slope inclination. the values are stated in pounds and kilograms.

Angle of slope inclination	10%		20%		40%		60%		80%		100%	
Winch pull force value Lbs/kg	Lbs	kg	Lbs	kg	Lbs	kg	Lbs	kg	Lbs	kg	Lbs	kg
1500	7538	3392	5102	2296	3233	1455	2496	1123	2134	960	1928	868
2000	10050	4523	6803	3061	6347	2856	2816	1267	2407	1083	2175	979
2500	12563	5653	8503	3826	5388	2425	4160	1872	3556	1600	3213	1446
3500	17588	7915	11905	5357	7543	3394	5824	2621	4979	2241	4499	2025
6000	30151	13568	20408	9184	12931	5819	9983	4492	8535	3841	7712	3470
8000	40174	18078	27209	12244	17206	7743	13285	5978	11364	5114	10244	4610
9000	42714	19221	28912	13010	18319	8244	14167	6375	12093	5442	10925	4916
10000	47739	21483	32313	14541	20474	9213	15833	7125	13515	6082	12211	5495
12000	60240	27108	40800	18360	25800	11610	19920	8964	17040	7668	15360	6912
13500	67770	30497	45900	20655	29025	13061	22410	10085	19170	8627	17280	7776
15000	75300	33885	51000	22950	32250	14513	24900	11205	21300	9585	19200	8640
16500	82830	37274	56100	25245	35475	15964	27390	12326	23430	10544	21120	9504
18000	90368	40665	61205	27542	38703	17416	29882	13447	25562	11503	23042	10369

130.com.ua

IMPORTANT

The values above apply for freely running vehicle, without additional terrain obstacles. In some cases, using a larger capacity winch or appropriate pulley block may be necessary.

The values above specify the maximum pull force of the winch using a single line, when winding the first rope layer on the drum.

IMPORTANT

Safety precautions and procedures presented in this manual cannot anticipate all possible circumstances and situations you may encounter. It is always essential to use your common sense and maximum safety.

IMPORTANT

If you have any question at any point of the manual please do not hesitate to contact with us.

130.com.ua

We wish you successful use
of D R A G O N W I N C H products

DECLARATION OF CONFORMITY

ABILUS, general distributor of DRAGON WINCH brand, declares at its full responsibility that the equipment listed below, as marketed, complies with EU directive with respect to its design and construction. We also inform that this document is invalidated in case of the buyer's interference with the mechanical or electrical part of the equipment without prior consultation with ABILUS. We also inform that the equipment listed below may be constituent parts of other equipment/machines, which as a new product may not be started unless they satisfy the occupational health and safety requirements of the relevant EU directives.

EQUIPMENT DESCRIPTION : ELECTRICAL HOISTING WINCHES
DRAGON WINCH POWERED WITH DIRECT CURRENT :
12V OR 24V
RATED PULL CAPACITY (LB) 2000, 2500, 3000, 3500,4000, 4500, 5000, 6000, 8000, 9500, 10000, 11000, 120000, 13000, 13500, 15000, 16800, 18000, 20000

The products described above comply with and meet the requirements of:

- Directive 89/336/EEC on electromagnetic compatibility, modified by Directive 92/31/EEC and modified by Directive 2004/108/CE

- Low Voltage Directive 73/23/EEC modified by Directive 93/68/EEC of 22 July 1993 and modified by Directive 2006/95/WE

- EN 60204-1:1997 modified by Directive EN 60204-1:2010
- EN 60335-1:1994/A1+A11+A12+A13 modified by Directive EN 60335-1:2012/A1+A11+A12+A13
- EN 50144-1:1998 modified by Directive EN 50580:2012
- EN 61029-1:2000 modified by Directive EN 61029-1:2009

CERTIFIED TO BE TRUE : DIRECTOR

130.com.ua

DECLARATION OF CONFORMITY

ABILUS, general distributor of DRAGON WINCH brand, declares at its full responsibility that the equipment listed below, as marketed, complies with EU directive with respect to its design and construction. We also inform that this document is invalidated in case of the buyer's interference with the mechanical or electrical part of the equipment without prior consultation with ABILUS. We also inform that the equipment listed below may be constituent parts of other equipment/machines, which as a new product may not be started unless they satisfy the occupational health and safety requirements of the relevant EU directives.

EQUIPMENT DESCRIPTION : ELECTRICAL HOISTING WINCHES DRAGON WINCH POWERED WITH DIRECT CURRENT : 12V
RATED PULL CAPACITY (LB): 12000, 13000.

The products described above comply with and meet the requirements of:

-Machinery Directive 2006/42/EC

Directive 2006/42/EC of the European Parliament and of the Council of 17 May 2006 on machinery, and amending Directive 95/16/EC (recast)

Test standard:

- EN 14492-1:2006+1:2009/AC:2010
- EN ISO 12100:2010

Test Report Number SGS-CSTC: SHES 111200217001/02

CERTIFIED TO BE TRUE :

DYREKTOR
DIRECTOR

130.com.ua

WINCH PARAMETERS

DRAGON WINCH MAVERICK series

DWM 13000 HD

Voltage:12 V/24 V
Motor: 6,8 HP
Pulling rate: 13 000 lb/ 5 897 kg
Gear: 3 stage planetary
Reduction: 265: 1
Brake: dynamic
Length of the wire rope: 28 m
Overall size: 535 mm x 160 mm x 235 mm
Weight: 42 kg
Rozstaw śrub montażowych: 254 mm x 114 m

Rope winding speed and power consumption (the first rope layer on the drum)

Rope load	kg	0	910	2722	5897
Rope speed	m/min	6,5	3,5	2,2	0,8
Power consumption	amp	65	126	230	420

Pulling force depending on rope layer

Rope layer		1	2	3	4
Rope pull	kg	5897	4749	3906	3341
Rope length on the drum	m	4,8	12	21	28

DWM 13000 ST

Voltage: 12 V/24 V
Motor: 6,8 HP
Pulling rate: 13 000 lb/ 5 897 kg
Gear: 3 stage planetary
Reduction: 265: 1
Brake: dynamic
Length of the wire rope: 28 m
Overall size: 535 mm x 160 mm x 245 mm
Weight: 42 kg
Spacing of mounting screws: 254 mm x 114 m

Rope winding speed and power consumption (the first rope layer on the drum)

Rope load	kg	0	910	2722	5897
Rope speed	m/min	6,5	3,5	2,2	0,8
Power consumption	amp	65	126	230	420

Pulling force depending on rope layer

Rope layer		1	2	3	4
Rope pull	kg	5897	4749	3906	3341
Rope length on the drum	m	4,8	12	21	28

DWM 12000 HDI

Voltage: 12 V
Motor: 6,8 HP
Pulling rate: 12 000 lb/ 5 443 kg
Gear: 3 stage planetary
Reduction: 265: 1
Brake: dynamic
Length of the wire rope: 28 m
Length of the synthetic rope: 26 m.
Overall size: 535 mm x 160 mm x 255 mm
Weight: 43 kg
Spacing of mounting screws: 254 mm x 114 mm

Rope winding speed and power consumption (the first rope layer on the drum)

Rope load	kg	0	910	1814	5443
Rope speed	m/min	6,5	3,5	2,8	1,3
Power consumption	amp	65	126	175	400

Pulling force depending on rope layer

Rope layer		1	2	3	4
Rope pull	kg	5443	4383	3605	3084
Rope length on the drum	m	4,8	12	21	28

DWM 12000 HD

Voltage: 12 V/ 24 V
Motor: 6,8 HP
Pulling rate: 12 000 lb/ 5 443 kg
Gear: 3 stage planetary
Reduction: 265: 1
Brake: dynamic
Length of the wire rope: 28 m
Length of the synthetic rope: 26 m.
Overall size: 535 mm x 160 mm x 245 mm
Weight: 42 kg
Spacing of mounting screws: 254 mm x 114 mm

Rope winding speed and power consumption (the first rope layer on the drum)

Rope load	kg	0	910	1814	5443
Rope speed	m/min	6,5	3,5	2,8	1,3
Power consumption	amp	65	126	175	400

Pulling force depending on rope layer

Rope layer		1	2	3	4
Rope pull	kg	5443	4383	3605	3084
Rope length on the drum	m	4,8	12	21	28

DWM 10000 HD

Voltage: 12 V/ 24 V
Motor: 6,8 HP
Pulling rate: 10 000 lb/ 4 536 kg
Gear: 3 stage planetary
Reduction: 216:1
Brake: dynamic
Length of the wire rope: 28 m
Length of the synthetic rope: 26 m
Overall size: 535 mm x 160 mm x 245 mm
Weight: 39 kg
Spacing of mounting screws: 254 mm x 114 mm

Rope winding speed and power consumption (the first rope layer on the drum)

Rope load	kg	0	910	1814	4536
Rope speed	m/min	8	4,5	3,5	2,5
Power consumption	amp	70	150	217	435

Pulling force depending on rope layer

Rope layer		1	2	3	4
Rope pull	kg	4536	3653	3004	2570
Rope length on the drum	m	4,8	12	21	28

130.com.ua

WINCH PARAMETERS

DRAGON WINCH MAVERICK series

DWM 8000 HD

Voltage: 12 V
Motor: 5,5 HP
Pulling rate: 8 000 lb/ 3 629 kg
Gear: 3 stage planetary
Reduction: 218:1
Brake: dynamic
Length of the wire rope: 24 m.
Overall size: 450 mm x 160 mm x 245 mm
Weight: 32 kg
Spacing of mounting screws: 166 mm x 114 mm

Rope winding speed and power consumption (the first rope layer on the drum)

Rope load	kg	0	907	1814	3629
Rope speed	m/min	8,6	4,7	3,5	2,3
Power consumption	amp	70	160	240	390

Pulling force depending on rope layer

Rope layer		1	2	3	4
Rope pull	kg	3629	2922	2404	2056
Rope length on the drum	m	4,1	9	15	24

DWM 6000

Voltage: 12 V
Motor: 4 KM
Pulling rate: 6 000 lb/ 2 722 kg
Gear: 3 stage planetary
Reduction: 218:1
Brake: automatic
Length of the wire rope: 24 m.
Overall size: 415 mm x 160 mm x 245 mm
Weight: 26 kg
Spacing of mounting screws: 166 mm x 114 mm

Rope winding speed and power consumption (the first rope layer on the drum)

Rope load	kg	0	680	1360	2722
Rope speed	m/min	4	3,2	2,2	0,7
Power consumption	amp	80	120	150	280

Pulling force depending on rope layer

Rope layer		1	2	3	4
Rope pull	kg	2722	2192	1803	1542
Rope length on the drum	m	4,1	9	15	24

DWM 3500 HD

Voltage: 12 V
Motor: 1,3 HP
Pulling rate: 3 500 lb/ 1 588 kg
Reduction: 170:1
Brake: Selfbrake
Length of the wire rope: 15 m
Length of the synthetic rope: 15 m
Overall size: 340 mm x 105 mm x 112 mm
Weight: 10,5 kg
Spacing of mounting screws: 124 mm x 76 mm

Rope winding speed and power consumption (the first rope layer on the drum)

Rope load	kg	0	907	1588
Rope speed	m/min	4,7	3,5	1,8
Power consumption	amp	30	130	190

Pulling force depending on rope layer

Rope layer		1	2	3	4	5
Rope pull	kg	1588	1265	1052	900	786
Rope length on the drum	m	1,9	4,2	6,8	9,7	15

DWM 3000 HD

Voltage: 12 V
Motor: 1,1 HP
Pulling rate: 3 000 lb/ 1 326 kg
Reduction: 153:1
Brake: Selfbrake
Length of the wire rope: 15 m
Length of the synthetic rope: 15 m
Overall size: 325 mm x 105 mm x 112 mm
Weight: 10 kg
Spacing of mounting screws: 124 mm x 76 mm

Rope winding speed and power consumption (the first rope layer on the drum)

Rope load	kg	0	907	1326
Rope speed	m/min	4,7	3,5	1,6
Power consumption	amp	20	107	169

Pulling force depending on rope layer

Rope layer		1	2	3	4	5
Rope pull	kg	1326	1079	909	785	691
Rope length on the drum	m	1,9	4,2	6,8	9,7	15

DWM 2500 HD

Voltage: 12 V
Motor: 1,1 HP
Pulling rate: 2 500 lb/ 1 133 kg
Reduction: 153:1
Brake: Selfbrake
Length of the wire rope: 15 m
Length of the synthetic rope: 15 m
Overall size: 325 mm x 105 mm x 112 mm
Weight: 9,5 kg
Spacing of mounting screws: 124 mm x 76 mm

Rope winding speed and power consumption (the first rope layer on the drum)

Rope load	kg	0	680	1133
Rope speed	m/min	4,7	3,6	1,9
Power consumption	amp	20	100	150

Pulling force depending on rope layer

Rope layer		1	2	3	4	5
Rope pull	kg	1133	922	777	671	591
Rope length on the drum	m	2,2	4,7	7,5	10,5	15

130.com.ua

WINCH PARAMETERS

DRAGON WINCH MAVERICK series

DWM 2500 ST

Voltage: 12 V
Motor: 0,9 HP
Pulling rate: 2 500 lb/ 1 333 kg
Reduction: 153:1
Brake: Selfbrake
Length of the wire rope:: 10 m
Overall size: 290 mm x 105 mm x 105 mm
Weight: 6 kg

Rope winding speed and power consumption (the first rope layer on the drum)

Rope load	kg		454	1133
Rope speed	m/min	3,2	2,6	0,8
Power consumption	amp	20	55	110

Pulling force depending on rope layer

Rope layer		1	2	3	4
Rope pull	kg	1133	590	495	430
Rope length on the drum	m	2	4,3	7,2	10

DWM 2000 ST

Voltage: 12 V
Motor: 0,9 HP
Pulling rate: 2 000 lb/ 907 kg
Reduction: 153:1
Brake: Selfbrake
Length of the wire rope: 10 m
Overall size: 290 mm x 105 mm x 105 mm
Weight: 5,8 kg

Rope winding speed and power consumption (the first rope layer on the drum)

Rope load	kg	0	454	907
Rope speed	m/min	3,2	2,6	1
Power consumption	amp	20	55	95

Pulling force depending on rope layer

Rope layer		1	2	3	4
Rope pull	kg	907	740	620	540
Rope length on the drum	m	2	4,3	7,2	10

DRAGON WINCH HIGHLANDER series

DWH 18000 HD

Voltage: 24 V
Motor: 9 HP
Pulling rate: 18 000 lb/ 8 165 kg
Gear: 3 stage planetary
Reduction: 345:1
Brake: dynamic
Length of the wire rope: 28 m
Overall size: 610 mm x 216 mm x 240 mm
Weight: 69 kg
Spacing of mounting screws: 254 mm x 114 mm/ 254 mm x 165 mm

Rope winding speed and power consumption (the first rope layer on the drum)

Rope load	kg	0	4532	5443	8165
Rope speed	m/min	6,5	3,0	2,5	1,9
Power consumption	amp	70	220	290	440

Pulling force depending on rope layer

Rope layer		1	2	3	4
Rope pull	kg	8165	6597	5534	4245
Rope length on the drum	m	5	11,5	19	28

DWH 15000 HD

Voltage: 12 V
Motor: 9 HP
Pulling rate: 15 000 lb/ 6 803 kg
Gear:3 stage planetary
Reduction: 261: 1
Brake: dynamic
Length of the wire rope: 28 m
Overall size: 585 mm x 170 mm x 215 mm
Weight: 53 kg
Spacing of mounting screws: 254 mm x 114 mm

Rope winding speed and power consumption (the first rope layer on the drum)

Rope load	kg	0	4532	5443	6803
Rope speed	m/min	7,5	4,1	3,5	2,8
Power consumption	amp	70	310	450	585

Pulling force depending on rope layer

Rope layer		1	2	3	4
Rope pull	kg	6803	6157	5165	4449
Rope length on the drum	m	5	11,5	19	28

DWH 12000 HDV

Voltage: 12 V
Motor: 9 HP
Pulling rate: 12 000 lb/ 5 443 kg
Gear: 3 stage planetary
Reduction:
262:1 (slow gear)
29:1 (fast gear)
Brake: dynamic
Length of the wire rope:: 28 m
Length of the synthetic rope: 26 m.
Overall size: 640 mm x 166 mm x 270 mm
Weight: 46 kg
Spacing of mounting screws: 254 mm x 114 mm

Rope winding speed and power consumption (the first rope layer on the drum)

slow gear

Rope load	kg	0	910	4532	5443
Rope speed	m/min	8	5	2,5	2
Power consumption	amp	80	130	320	450

fast gear

Rope load	kg	brak	252	441	756
Rope speed	m/min	36	18	14	9
Power consumption	ampery	80	130	320	450

Pulling force depending on rope layer

Rope layer		1	2	3	4
Rope pull	kg	5443	4383	3605	3084
Rope length on the drum	m	4,8	12	21	28

130.com.ua

WINCH PARAMETERS

DRAGON WINCH HIGHLANDER series

DWH 12000 HD

Voltage: 12 V
Motor: 7,2 HP
Pulling rate: 12 000 lb/ 5 443 kg
Gear: 3 stage planetary
Reduction: 273: 1
Brake: dynamic
Length of the wire rope:: 28 m
Length of the synthetic rope: 26 m.
Overall size: 575 mm x 166 mm x 270 mm
Weight: 46 kg
Spacing of mounting screws: 254 mm x 114 mm

Rope winding speed and power consumption (the first rope layer on the drum)

Rope load	kg	0	910	4532	5443
Rope speed	m/min	8	5	2,5	2
Power consumption	amp	65	130	280	350

Pulling force depending on rope layer

Rope layer		1	2	3	4
Rope pull	kg	5443	4383	3605	3084
Rope length on the drum	m	4,8	12	21	28

DWH 10000 HD

Voltage: 12 V/ 24 V
Motor: 7,2 HP
Pulling rate: 10 000 lb/ 4 536 kg
Gear: 3 stage planetary
Reduction: 216:1
Brake: dynamic
Length of the wire rope:: 28 m
Length of the synthetic rope: 26 m
Wymiary (LxWxH): 575 mm x 166 mm x 270 mm
Weight: 44 kg
Spacing of mounting screws: 254 mm x 114 mm

Rope winding speed and power consumption (the first rope layer on the drum)

Rope load	kg	0	2722	3629	4536
Rope speed	m/min	11	5	4,5	3
Power consumption	amp	70	170	280	350

Pulling force depending on rope layer

Rope layer		1	2	3	4
Rope pull	kg	4536	3653	3004	2570
Rope length on the drum	m	4,8	12	21	28

DWH 9000 HD

Voltage: 12 V
Motor: 9 HP
Pulling rate: 9 000 lb/ 4 082 kg
Gear: 3 stage planetary
Reduction: 136:1
Brake: dynamic
Length of the wire rope: 28 m
Length of the synthetic rope: 26 m.
Overall size: 590 mm x 166 mm x 270 mm
Weight: 40 kg
Spacing of mounting screws: 254 mm x 114 mm

Rope winding speed and power consumption (the first rope layer on the drum)

Rope load	kg	0	1812	2718	4082
Rope speed	m/min	20	9	7	4,5
Power consumption	amp	58	220	280	360

Pulling force depending on rope layer

Rope layer		1	2	3	4
Rope pull	kg	4082	3287	2704	2313
Rope length on the drum	m	6	13	22	28

DWH 4500 HDL

Voltage: 12 V
Motor: 1,9 HP
Pulling rate: 4 500 lb/ 2 041 kg
Gear: 3 stage planetary
Reduction: 159:1
Brake: automatic
Length of the wire rope: 15 m
Length of the synthetic rope: 15 m
Overall size: 375 mm x 114 mm x 120 mm
Weight: 12,7 kg
Spacing of mounting screws: 170 mm x 765 mm

Rope winding speed and power consumption (the first rope layer on the drum)

Rope load	kg		907	2041
Rope speed	m/min	7,5	4	2,1
Power consumption	amp	25	90	160

Pulling force depending on rope layer

Rope layer		1	2	3	4	5
Rope pull	kg	2041	1588	1412	1278	1072
Rope length on the drum	m	4	7	10,5	14,5	20

DWH 4500 HD

Voltage: 12 V
Motor: 1,9 HP
Pulling rate: 4 500 lb/ 2 041 kg
Gear: 3 stage planetary
Reduction: 159:1
Brake: automatic
Length of the wire rope: 15 m
Length of the synthetic rope: 15 m.
Overall size: 340 mm x 114 mm x 120 mm
Weight: 11,4 kg
Spacing of mounting screws: 125 mm x 80 mm

Rope winding speed and power consumption (the first rope layer on the drum)

Rope load	kg	brak	907	2041
Rope speed	m/min	7,5	4	2,1
Power consumption	ampery	25	90	160

Pulling force depending on rope layer

Rope layer		1	2	3	4	5
Rope pull	kg	2041	1588	1412	1278	1072
Rope length on the drum	m	3	5,9	7,8	12,5	15

130.com.ua

WINCH PARAMETERS

DRAGON WINCH HIGHLANDER series

DWH 3500 HD

Voltage: 12 V
Motor: 1,6 HP
Pulling rate: 3 500 lb/ 1 588 kg
Gear:3 stage planetary
Reduction: 136:1
Brake: automatic
Length of the wire rope: 15 m
Length of the synthetic rope: 15 m
Overall size: 360 mm x 114 mm x 120 mm
Weight: 11 kg
Spacing of mounting screws: 124 mm x 76 mm

Rope winding speed and power consumption (the first rope layer on the drum)

Rope load	kg	0	907	1588
Rope speed	m/min	8,3	5,5	3
Power consumption	amp	25	107	150

Pulling force depending on rope layer

Rope layer		1	2	3	4	5
Rope pull	kg	1588	1300	1100	950	840
Rope length on the drum	m	1,9	4,2	6,8	9,7	15

DWH 2500 HD

Voltage: 12 V
Motor: 1,6 HP
Pulling rate: 2 500 lb/ 1 133 kg
Gear: trójstopniowa przekładnia planetarna
Reduction: 136:1
Brake: automatic
Length of the wire rope: 15 m
Length of the synthetic rope: 15 m
Overall size: 360 mm x 114 mm x 120 mm
Weight: 11 kg
Spacing of mounting screws: 124 mm x 76 mm

Rope winding speed and power consumption (the first rope layer on the drum)

Rope load	kg	brak	907	1133
Rope speed	m/min	8,3	5,5	3,5
Power consumption	ampery	25	107	120

Pulling force depending on rope layer

Rope layer		1	2	3	4	5
Rope pull	kg	1133	910	770	665	585
Rope length on the drum	m	1,9	4,2	6,8	9,7	15

DRAGON WINCH TRUCK series

DWT 20000 HD

Voltage: 24 V
Motor: 9 HP
Pulling rate: 20 000 lb/ 9 072 kg
Gear: 3 stage planetary
Reduction: 450:1
Brake: dynamic
Length of the wire rope: 28 m.
Overall size: 615 mm x 215 mm x 275 mm
Weight: 74 kg
Spacing of mounting screws: 254 mm x 114 mm/ 254 mm x 165 mm

Rope winding speed and power consumption (the first rope layer on the drum)

Rope load	kg	brak	4532	5443	9072
Rope speed	m/min	6,5	3	2,5	1,9
Power consumption	ampery	60	170	190	280

Pulling force depending on rope layer

Rope layer		1	2	3	4
Rope pull	kg	9072	7330	6149	5296
Rope length on the drum	m	5	11,5	19	28

DWT 18000 HD

Voltage: 24 V
Motor: 7,8 HP
Pulling rate: 18 000 lb/ 8 165 kg
Gear: planetary
Reduction: 420:1
Brake: dynamic
Length of the wire rope: 28 m
Overall size: 580 mm x 210 mm x 260 mm
Weight: 69 kg
Spacing of mounting screws: 254 mm x 114 mm

Rope winding speed and power consumption (the first rope layer on the drum)

Rope load	kg	brak	4532	5443	8165
Rope speed	m/min	6,5	2,1	1,8	1,5
Power consumption	ampery	55	240	300	450

Pulling force depending on rope layer

Rope layer		1	2	3	4
Rope pull	kg	8165	6597	5534	4245
Rope length on the drum	m	5	11,5	19	28

DWT 16800 HD

Voltage: 12 V/ 24 V
Motor: 7,8 HP
Pulling rate: 16 800 lb/ 7 620 kg
Gear: 3 stage planetary
Reduction: 358:1
Brake: dynamic
Length of the wire rope: 26 m.
Overall size: 560 mm x 195 mm x 250 mm
Weight: 53 kg
Spacing of mounting screws: 254 mm x 250 mm

Rope winding speed and power consumption (the first rope layer on the drum)

Rope load	kg	0	4532	5443	7620
Rope speed	m/min	5,5	2,9	2,3	1,6
Power consumption	amp	70	280	360	420

Pulling force depending on rope layer

Rope layer		1	2	3	4
Rope pull	kg	7620	6157	5165	4449
Rope length on the drum	m	5	11,5	19	26

130.com.ua

WINCH PARAMETERS

DRAGON WINCH TRUCK series

DWT 15000 HD

Voltage: 12 V/ 24 V
Motor: 7,8 HP
Pulling rate: 15 000 lb/ 6 803 kg
Gear: 3 stage planetary
Reduction: 318:1
Brake: dynamic
Length of the wire rope: 26 m.
Overall size: 560 mm x 195 mm x 250 mm
Weight: 51 kg
Spacing of mounting screws: 254 mm x 114 mm

Rope winding speed and power consumption (the first rope layer on the drum)

Rope load	kg	0	5432	5443	6803
Rope speed	m/min	7,5	4,3	3,5	2,9
Power consumption	amp	70	280	360	420

Pulling force depending on rope layer

Rope layer		1	2	3	4
Rope pull	kg	6803	6157	5165	4449
Rope length on the drum	m	5	11,5	19	26

DWT 15000 HDL

Voltage: 24 V
Motor: 9 HP
Pulling rate: 14 000 lb/ 6 803 kg
Gear: 1 stage planetarny and 2 stage cykloidal
Reduction: 420:1
Brake: dynamic
Length of the wire rope: 60 m
Overall size: 815 mm x 210 mm x 260 mm
Weight: 80 kg
Spacing of mounting screws: 454 mm x 114 mm

Rope winding speed and power consumption (the first rope layer on the drum)

Rope load	kg	0	3626	4535	6803
Rope speed	m/min	4,8	1,7	1,4	1
Power consumption	amp	70	310	190	260

Pulling force depending on rope layer

Rope layer		1	2	3	4
Rope pull	kg	6803	5113	4581	3955
Rope length on the drum	m	12	26	42	60

DWT 14000 HD

Voltage: 12 V/ 24 V
Motor: 7,2 HP
Pulling rate: 14 000 lb/ 6 350 kg
Gear: 3 stage planetary
Reduction: 261:1
Brake: dynamic
Length of the wire rope: 28 m
Overall size: 535 mm x 160 mm x 235 mm
Weight: 46 kg
Spacing of mounting screws: 254 mm x 114 mm

Rope winding speed and power consumption (the first rope layer on the drum)

Rope load	kg	0	4532	5440	6350
Rope speed	m/min	7,5	4,1	3,5	2,8
Power consumption	ampery	130	290	450	585

Pulling force depending on rope layer

Rope layer		1	2	3	4
Rope pull	kg	6350	5114	4206	3598
Rope length on the drum	m	4,9	11,1	18,3	28

130.com.ua

WINCH PARAMETERS

DRAGON WINCH portable

DWP 5000

Voltage: 12 V
Horse Power: 2,9 HP
Single line rated pull: 5 000 lb/ 2 265 kg
Brake: Selfbrake
Winding/unwinding rope: Coil of the electric wire
Length of the wire rope: 9 m
Overall size: 270 mm x 280 mm x 235 mm
Weight: 24 kg

DWP 3500

Voltage: 12 V
Horse Power: 1,3 HP
Single line rated pull: 3 500 lb/ 1 588 kg
Brake: Selfbrake
Winding/unwinding rope: Coil of the electric wire
Length of the wire rope: 9 m
Overall size: 270 mm x 240 mm x 210 mm
Weight:14 kg

DWP 2000

Voltage: 12 V
Horse Power: 0,9 HP
Single line rated pull: 2 000 lb/ 907 kg
Brake: Selfbrake
Winding/unwinding rope: Coil of the electric wire
Length of the wire rope: 9 m
Overall size: 270 mm x 240 mm x 190 mm
Weight: 10 kg

130.com.ua

Thank you for purchasing DRAGON WINCH. In case of technical problems, please contact our service. ABILUS, the exclusive distributor of the brand DRAGON WINCH, hereinafter the Guarantor, guarantees the efficient operation of the winch.

WARRANTY CONDITIONS

1. Warranty covers winches with a valid warranty card. The warranty card is valid with proof of purchase.
2. The warranty is granted for the period of 24 months, from the winch delivery date. The delivery date is indicated on the warranty.
3. The guarantor undertakes to repair the factory defects of the winch found during the warranty period.
4. The warranty does not cover the winch defects occurring as a result of:repairs performed otherwise than by the Guarantor, failure to comply with the principles of proper installation and operation described in the operation manual, storing the winch in improper conditions, neglect, lack of supervision, misuse, failure to follow winch handling principles, overloading the winch, random phenomena, such as: fire, electric discharge, flooding, operation of chemicals and force majeure circumstances and events.
5. The warranty does not cover mechanical operation defects such as: enclosure damage, motor, gear and drum damage, caused by overloading the winch. The parameters which, if exceeded, shall constitute winch overloading are specified in detail in the operation manual for the specific winch type.
6. The warranty does not cover enclosure elements and accessories which are subject to normal wear an tear during operation, such as: scratching, persistent dirt, wearing the inscriptions, etc.
7. The winch rope, both steel and synthetic one, is not covered by the warranty. Check the rope before first use.
8. The warranty does not cover winches which the non-operational due to failure to assure proper maintenance (see “Lubrication and Maintenance of the winch”).
9. The basis for considering of the warranty claim is sypplying: properly secured winch, valid warranty card, proof of purchase and complaint form, which should describe the defect and the circumstances in which it occurred as well as the type of vehicle in which the winch was installed and customer contact details (address, phone number).
10. Contact the Guarantor concerning the winch delivery at the specified address of the service. The guarantor shall cover the cost of transportation, as long as the winch is shipped through the courier indicated by the Guarantor.
11. A defect reported during the warranty period shall be repaired by the Guarantor at the Guarantor's cost within 14 working days. The period shall commence on the first working day after the date of delivery to the service.
12. If the repair requires spare parts to be imported from abroad, the repair period may be extended to 30 days, to which the customer consents by using the service.
13. The customer is entitled to replacement of the winch into the new one if the Guarantor finds the repair to be impossible. The winch shall be replaced with a new one, defect-free within not more than 30 days. If, in special cases (e.g. no such product on offer), the winch may not be replaced with the same type, the Guarantor, on agreement with the customer, shall replace the winch into the winch of another type, with possibly the closest technical parameters. Such procedure shall be considered fulfilling the guarantor's obligations.
14. If the complaint turns out to be unfounded, the Guarantor shall charge the customer with the costs of the warranty procedures and transport costs.
15. The Guarantor is not liable for the damages resulting from incorrect winch operation. The Guarantor shall not be responsible for additional costs incurred by the customer, resulting from damaging the winch.

130.com.ua

16. The warranty rights do not incorporate the customer's claims for reimbursement of profits lost in connection with the winch defect.
17. If the customer does not accept the warranty conditions, they are entitled to return the winch on the seller's expense within 10 working days from the date of purchase. In this case, the winch may not show any signs of use. The seller covers the expense of transport, provided that the dispatch will be send by the courier company determined by the seller.
18. In disputable matters, not regulated by this warranty, applicable regulations of the Civil Code shall apply.

130.com.ua